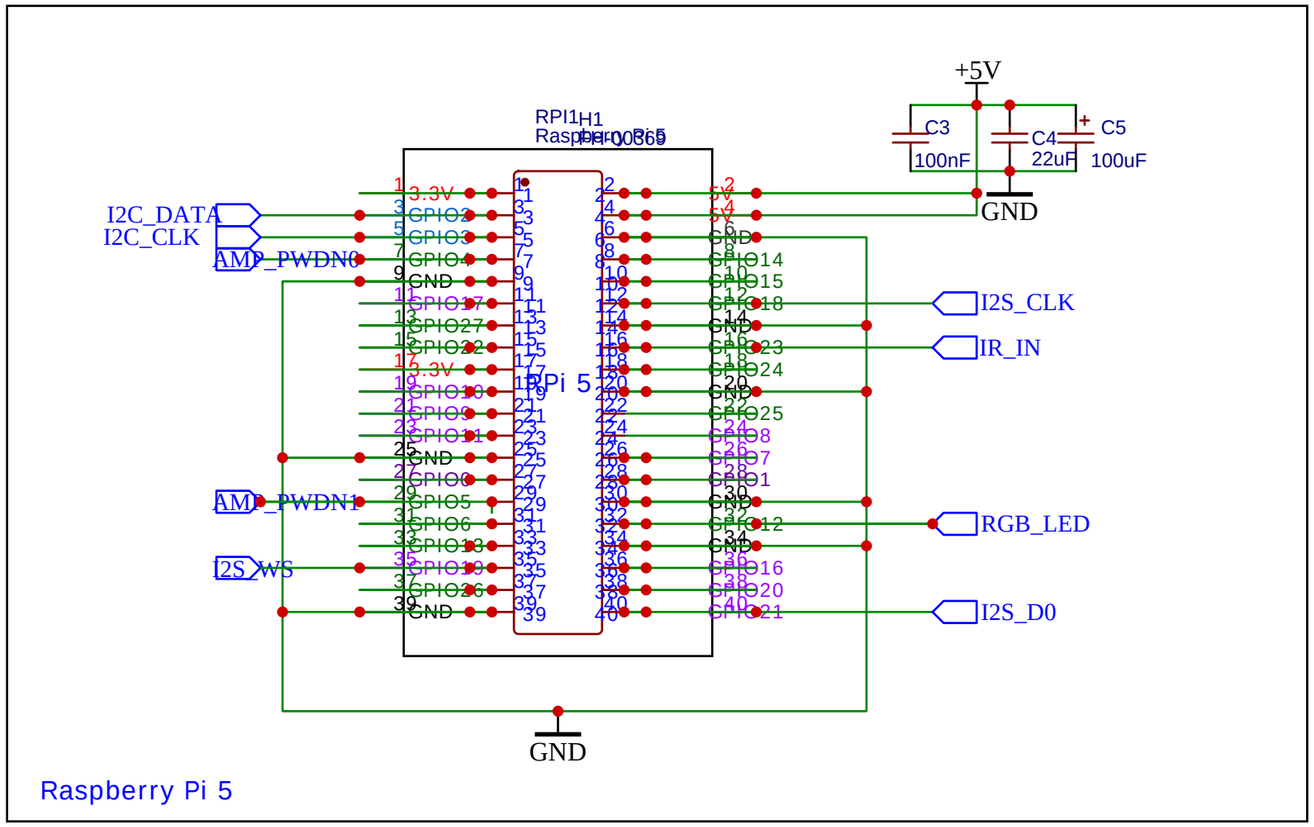

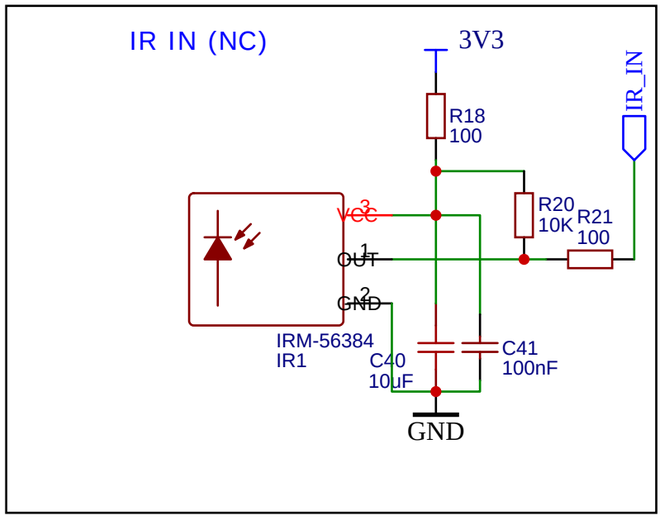

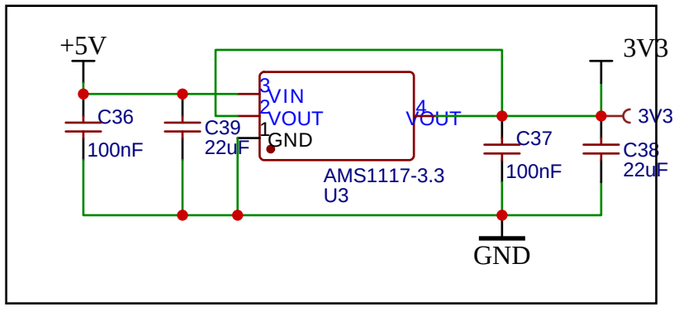

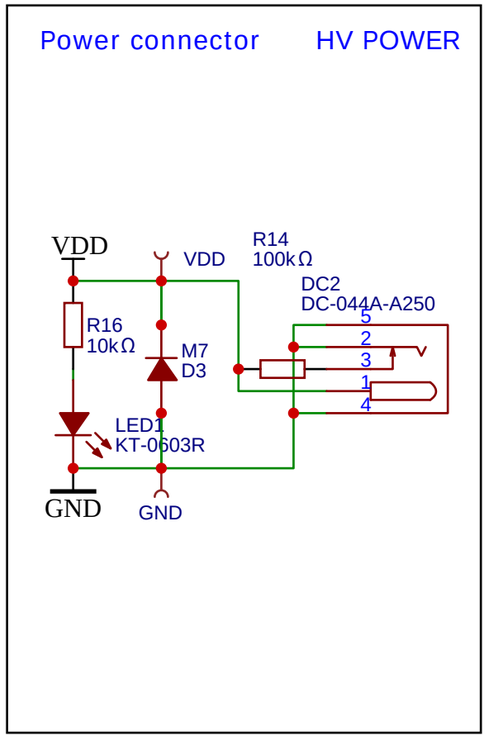

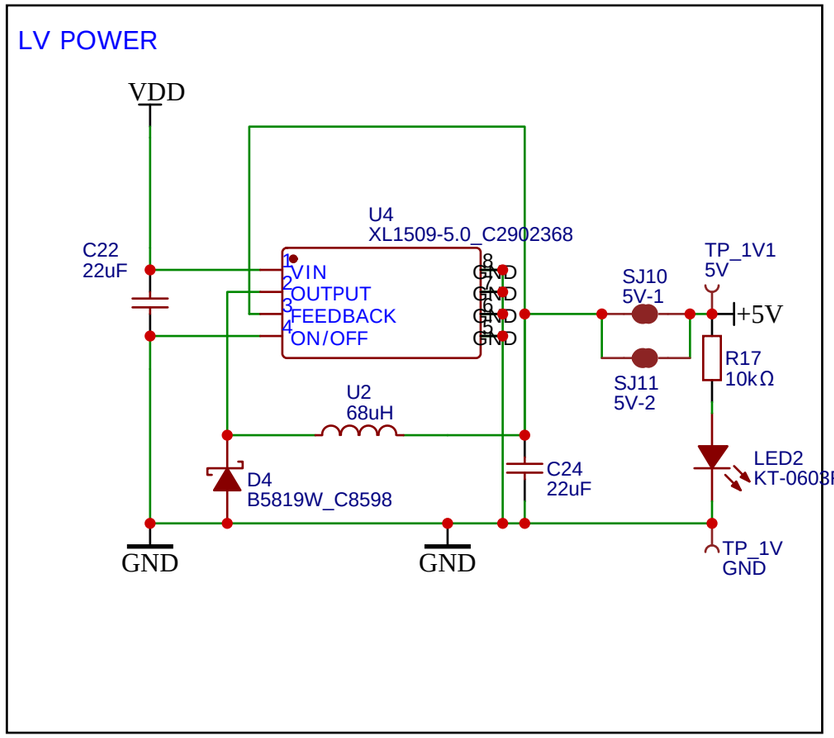

TITLE: Louder Raspberry Pi Hat (2X)		REV: F
EasyEDA	Company: Sonocotta	Sheet: 1/2
	Date: 2026-01-26 Drawn By: andriy@sonocotta.com	

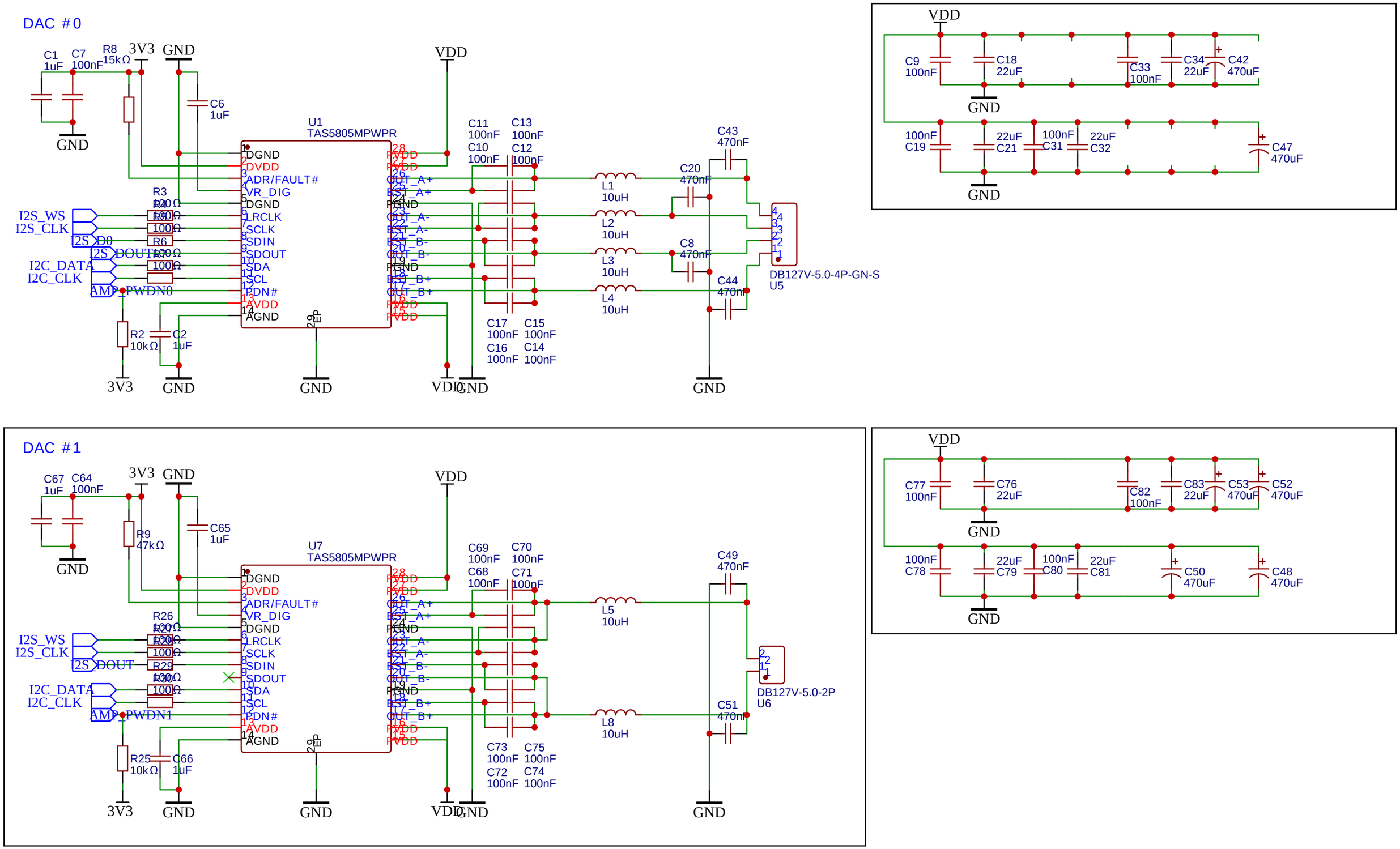

TITLE: Louder Raspberry Pi Hat (2X)

REV: F

Company: Sonocotta

Sheet: 2/2

Date: 2026-01-26

Drawn By: andriy@sonocotta.com